Unit Inverter

A unit inverter is the smallest possible inverter (in terms of size) whose propagation delays (i.e. t_{phl} and t_{plh}) are symmetric, which is:

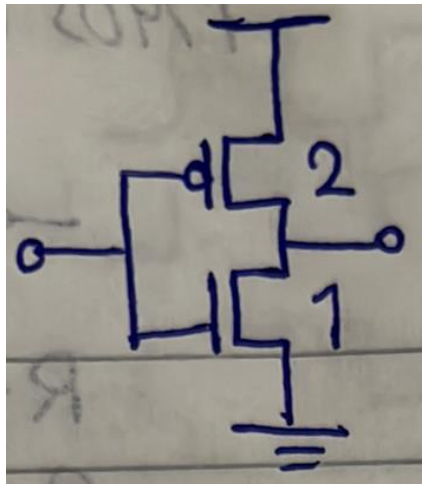

Example:

Size the gate shown for worst-case resistance equal to that of a unit inverter. Then, find best-case intrinsic delays. Assume $C_{gn_o} = C_{gp_o} = C_{g_o}$, $C_{dn_o} = C_{dp_o} = C_{d_o}$, $R_{p_o} = 2R_{n_o} = 2R_o$

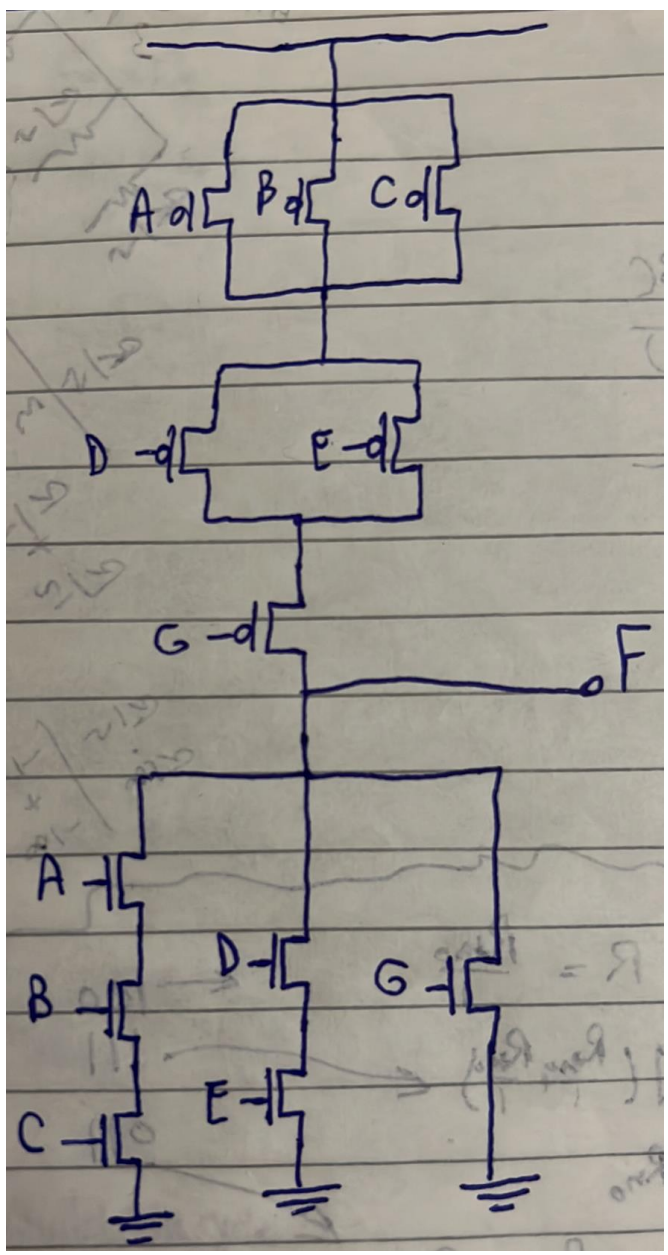

Solution:

- Worst case means 1 branch only shaghal sawa2 foo2 (i.e. during rising) aw t7t (i.e. during falling).
- Equal to that of a unit inverter, tyb howa el unit inverter el resistance beta3to kam?

$$R_{rise} = R_{fall} = R_o$$

Hence, we want kol branch shaghal lwa7do foo2 aw t7t teb2a el resistance beta3to R_o bardo. Thus:

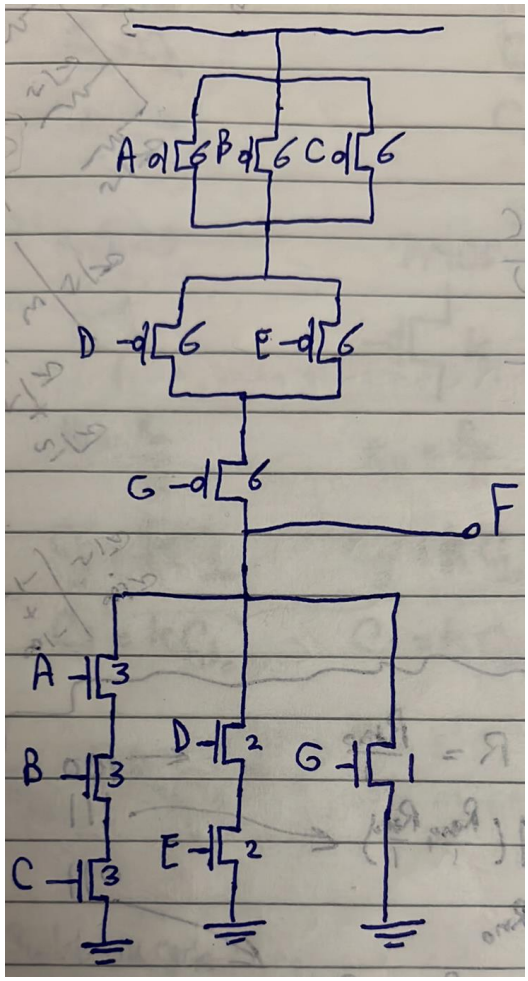

So, we always size our gates in the worst-case scenario so that it meets the required delay even in the worst-case.

Best-case intrinsic delay:

$$C_L = 3C_o + 2C_o + 1C_o + 6C_o = 12C_o$$

$$R_{fall} = \frac{R_o}{3}$$

$$R_{rise} = \frac{R_o}{9} + \frac{R_o}{6} + \frac{R_o}{3} = \frac{11}{18}R_o$$

$$t_{phl}|_{best} = 0.69 * R_{fall} * C_L$$

$$t_{plh}|_{best} = 0.69 * R_{rise} * C_L$$

Example:

Find the intrinsic delay (i.e. unloaded delay) of an n-input NAND gate whose resistance is the same as that of a unit inverter. Repeat for an n-input NOR gate.

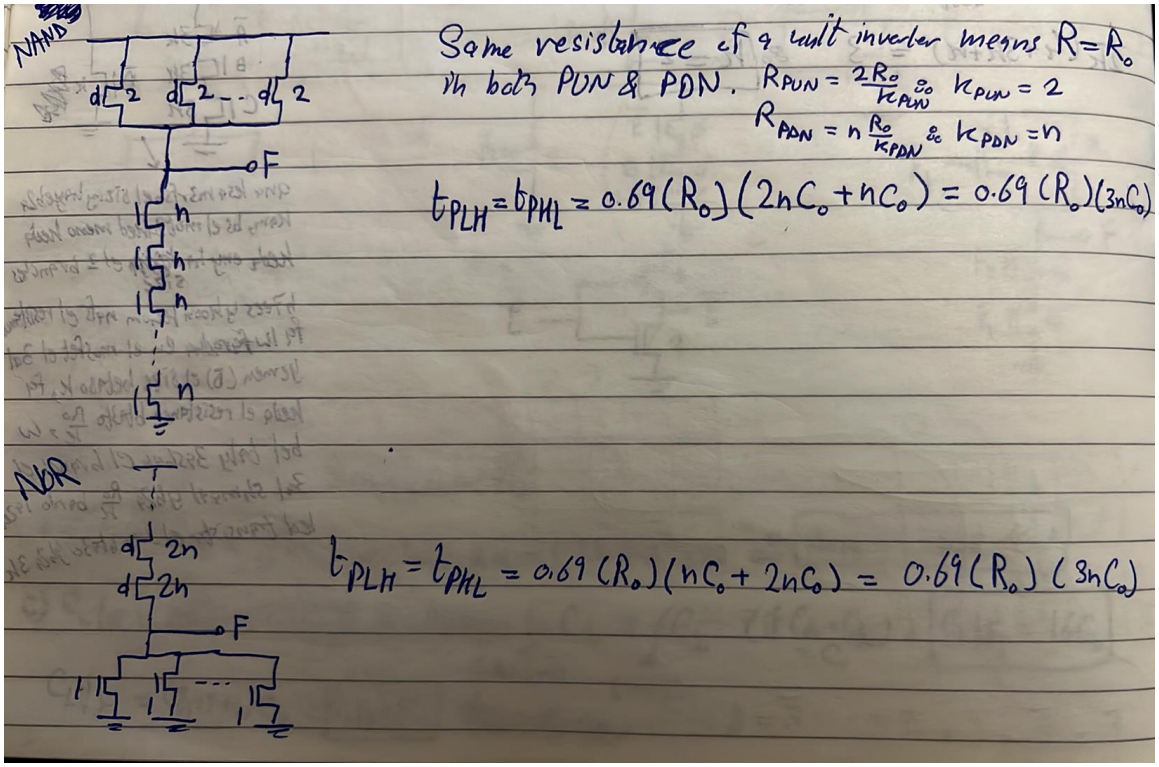

What is the intrinsic delay of a unit inverter?

$$t_{inv.} = 0.69 * (R_o) * (3C_o)$$

The intrinsic delay of a unit inverter is a technology Figure of Merit (FoM). That is, a new technology node is characterized by its inverter's delay.

Example:

The two circuits shown below both implement the same function $F = (A + BC)'$. Which topology is better?

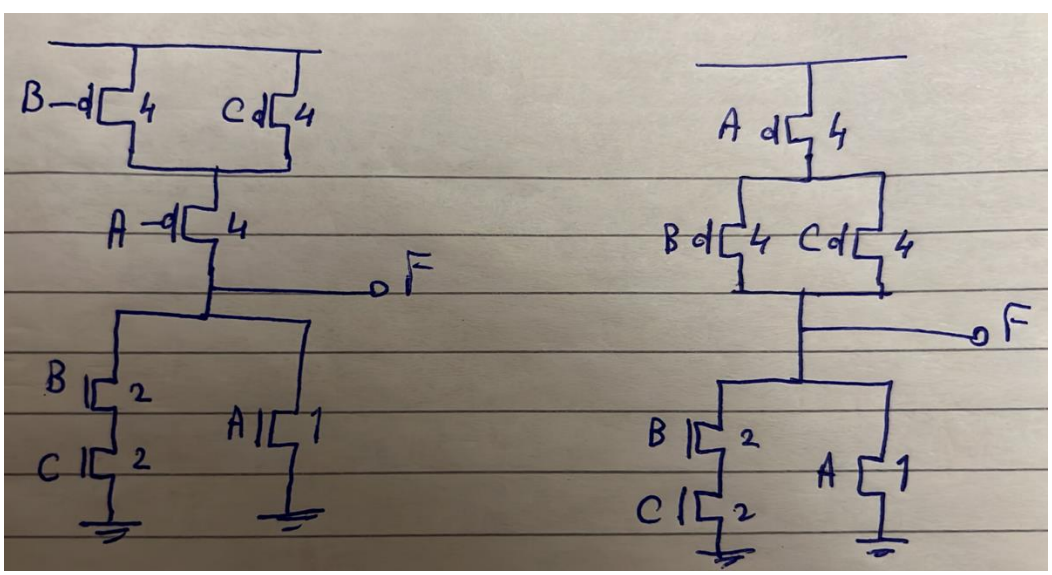

Answer: in digital circuits, the comparing metrics is PPA:

- Performance (i.e. delay): again, C_L is larger in topology 2 and hence ***topology 1 is better in terms of delay.***
- Area: both have same area.

From that we conclude: ***make sure you arrange transistors in PUN and PDN so that minimum number of transistors are next to the output node to minimize capacitance.***

A chain of inverters is shown below. This chain drives a large capacitance C_L at the end. De case mash-hora en nkoon bene3mel chip wel output pins beta3t el chip hat drive load of large capacitance, fa benesta5dem chain of inverters/buffer to drive this large load.

Given:

- The number of inverters in the chain *N.*
- The input capacitance C_{g0} of the first inverter (Note: C_{g0} ma2sood beha gate capacitance of the first inverter in the chain, de gheer C_{g_o} which is the gate capacitance of a unit inverter).

Goal:

- Size the rest of the inverters so as to minimize the total delay of the chain t_p.

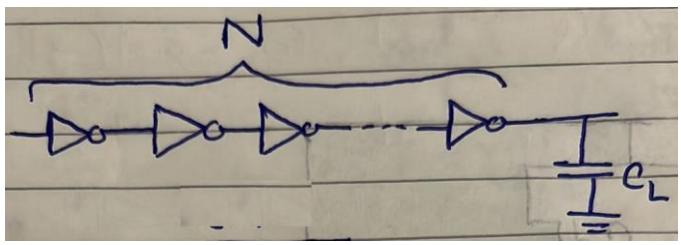

Note: en el gate capacitance yeb2a given da ma3nah eno edalak el size beta3 el inverter! Ezay? Enta 3aref en el unit inverter el size beta3 el PMOS 2 wel NMOS 1. Tyb el gate capacitance kam? $3C_o$. Tab el size PMOS 4 wel NMOS 2? Yeb2a gate capacitance = $6C_o$. Tab lw bel 3aks b2a, geet oltelak en fih inverter el gate capacitance beta3to $9C_o$, yeb2a el sizing beta3o eh? walahy ana 3aref enena ghaleban ben5aly el PMOS yeb2a el size beta3o double el NMOS (to have $t_{phl} = t_{plh}$), fa lw el NMOS el size beta3o k, yeb2a el PMOS el size beta3o $2k$. Yeb2a hashoof menhom gate capacitance $= 3kC_o$. Asaweha bel $9C_o$ yeb2a $k = 3$, yeb2a size el NMOS 3 w size el PMOS 6. See? edetak el gate capacitance bs 2edert te size el NMOS wel PMOS, just 5od el gate capacitance de e3melaha divide 3 yeb2a howa da size el NMOS, w edrab el tele3 da fi 2 teb2a gebt size el PMOS.

Fa el mohem el netla3 beeh men el hary da kolo howa en given the gate capacitance beta3 el inverter, ana keda 3ereft el size beta3o.

Answer:

$$t_p = \sum_{j=0}^{N-1} t_{p_j}$$

t_{p_j} : Propagation delay of inverter number j

$$t_{p_j} = 0.69\, R_j\,(C_{d_j} + C_{g_{j+1}}) = 0.69\, R_j\, C_{d_j}\left(1 + \frac{C_{g_{j+1}}}{C_{d_j}}\right) = t_{p_o}\left(1 + \frac{C_{g_{j+1}}}{C_{d_j}}\right)$$

assuming PUN & PDN have same resistance

intrinsic delay of any inverter, let it be t_{p_o}

$$\therefore t_p = t_{p_o} \sum_{j=0}^{N-1}\left(1 + \frac{C_{g_{j+1}}}{C_{d_j}}\right)$$

Assuming there is a constant ratio γ between drain & gate capacitances of a transistor $\Rightarrow C_{d_j} = \gamma C_{g_j}$

Note: 5aly balak t_{p_o} da constant and technology-dependent. Leeh?

1) Constant 3ashan el resistance R_j hateb2a ya2ema el resistance beta3t el NMOS ya2ema el resistance beta3t el PMOS. E7na aslan 2ayleen assume PUN & PDN have same resistance, y3ny e7na me5aleyeen el PMOS double el size beta3 el NMOS, fa lw el NMOS el size beta3o k, el PMOS hayeb2a $2k$, wel resistance R_j hateb2a $\frac{R_o}{k}$. Bel nesba le C_{d_j}, fa hateb2a $3kC_o$. Fa lama ne multiply R_j by C_{d_j} el $k's$ hayteero w hayetla3 $3R_oC_o$, which is constant regardless of the sizing! W da el olnah abl keda en el intrinsic delay beta3 ay gate howa independent of its sizing. Fa $t_{p_o} = 0.69 * R_jC_{d_j} = 0.69 * 3R_oC_o = constant$.
2) Technology-dependent 3ashan depends on R_oC_o which depend on the technology used.

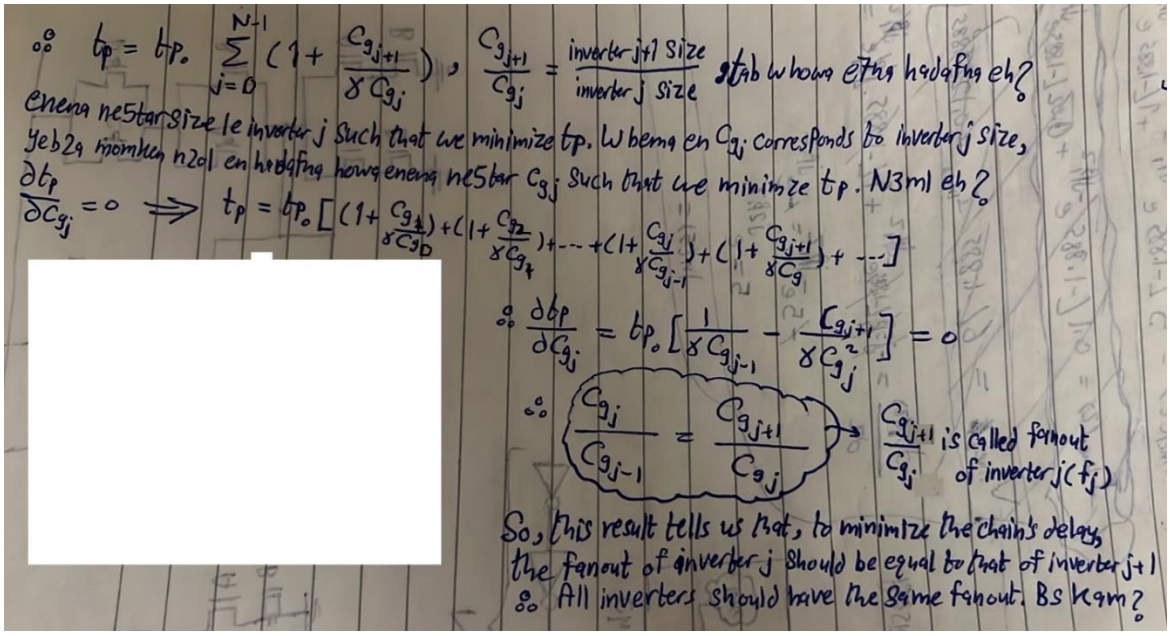

E7na ben2ol en el fanout beta3 ay gate heya el capacitance el heya shayfaha odamha 3al capacitance beta3et-ha. That is:

$$f = \frac{load\ capacitance}{input\ capacitance}$$

Tyb 3awzeen negeeb el total chain fanout (F) (i.e. lw afalna 3al chain of inverters de kolaha keda ka black box, hateb2a eh heya el fanout beta3to)?

$$F = f_0f_1f_2 \dots f_{N-1} = \frac{C_{g1}}{C_{g0}} * \frac{C_{g2}}{C_{g1}} * \frac{C_{g3}}{C_{g2}} \dots * \frac{C_{gN-1}}{C_{gN-2}} * \frac{C_L}{C_{gN-1}} = \frac{C_L}{C_{g0}}$$

$$\therefore f_0f_1f_2 \dots f_{N-1} = \frac{C_L}{C_{g0}}$$

But we said that to minimize the total chain delay, we need all fanouts to be equal. That is:

$$f_0 = f_1 = \dots = f_{N-1} = f_{optimum}$$

$$\therefore f_{opt.}^N = \frac{C_L}{C_{g0}} \rightarrow f_{opt.} = \sqrt[N]{\frac{C_L}{C_{g0}}}$$

Conclusion: to minimize the total chain delay:

1) *All inverters should have the same fanout,*
2) *And that fanout should be* $\sqrt[N]{\frac{C_L}{C_{g0}}}$*, where:*
   - *N: chain number of stages.*
   - C_L*: chain load capacitance.*
   - C_{g0}*: gate capacitance of the first inverter in the chain.*

Tyb mashy enta keda oltely el fanout beta3 kol gate el ye2alely el total chain delay. Ana maly bel fanout, ana 3ayez el size?

$$f_j = \frac{C_{g_{j+1}}}{C_{g_j}}$$, for optimum delay: $f_j = f_{opt.}$

f_j → fanout of inverter j

$$\therefore \frac{C_{g_{j+1}}}{C_{g_j}} = f_{opt.} \Rightarrow C_{g_{j+1}} = C_{g_j} f_{opt.}$$

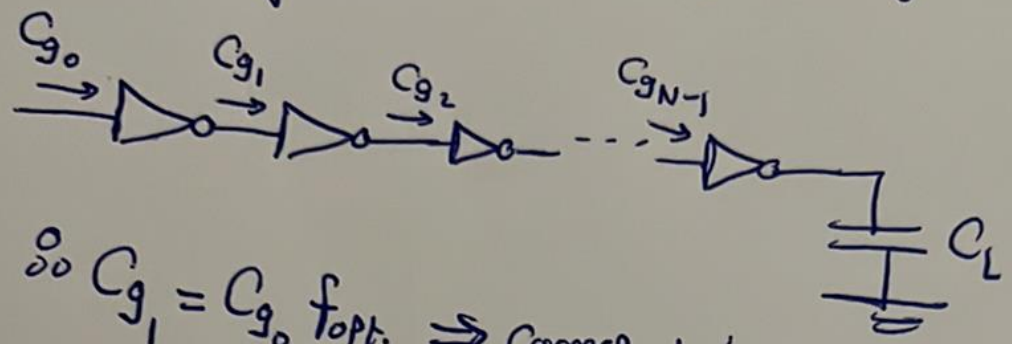

$\therefore C_{g_1} = C_{g_0} f_{opt.}$ ⇒ Corresponds to inverter 1's size

(C_{g_0} → given, $f_{opt.}$ → given)

$C_{g_2} = C_{g_0} f_{opt.}^2 \Rightarrow$ " " " 2's "

$C_{g_3} = C_{g_0} f_{opt.}^3 \Rightarrow$ " " " 3's "

⋮

$C_{g_{N-1}} = C_{g_0} f_{opt.}^{N-1} \Rightarrow$ " " " (N-1)'s "

∴ All inverters are sized!

Now, we study the case that a chain consists of a set of N arbitrary gates (i.e. not just inverters).

$$t_p = \sum_{j=0}^{N-1} t_{p_j}$$

t_{p_j}: Propagation delay of gate j

$$t_{p_j} = 0.69 R_j (C_{d_j} + C_{g_{j+1}}) = 0.69 R_j C_{d_j} \left(1 + \frac{C_{g_{j+1}}}{C_{d_j}}\right)$$

Notice that $0.69 R_j C_{d_j}$ is still technology-dependent as we said before, bs el moshkela hena en kol gate hayeb2a leha constant mo3ayan. Y3ny lama kanet el chain 3obara 3an inverters, kan el constant howa el constant beta3 inverter w 5elesna, fa 5adnah common-factor bara as a reference. Bs el moshkela hena en el 2-input NAND hayeb2a leha constant, wel 3-input NAND constant tany, wel 4-input NOR constant tany, and so on, fa mesh hayeb2a leha ma3na enena na5do howa ka common-factor (i.e. ka reference). N3ml eh? again, na5od el delay beta3 el inverter howa el reference! Hanedrab foo2 w t7t fi t_{p_o}:

$$t_{p_j} = 0.69 R_j C_{d_j} \left(1 + \frac{C_{g_{j+1}}}{C_{d_j}}\right) \times \frac{t_{p_o}}{t_{p_o}} \rightarrow 0.69 R_{inv.} C_{inv} = 0.69 \times 3 R_o C_o$$

$$= t_{p_o} \left(\frac{R_j C_{d_j}}{R_{inv.} C_{inv.}} + \frac{R_j C_{g_{j+1}}}{R_{inv.} C_{inv.}} \right)$$

$\frac{R_j C_{d_j}}{R_{inv.} C_{d_{inv.}}}$ da bey3abar 3an eh? de el ratio maben el intrinsic (i.e. unloaded) delay beta3 some gate divided by the intrinsic delay of an inverter. In other words, el ratio de bet2oly el gate de el internal delay beta3ha akbar 2ad eh men el internal delay beta3 inverter. We call it *normalized parasitic/intrinsic delay (p).* Ne7sebha ezay? Ne7seb el unloaded delay beta3 el gate w ne divide by el unloaded delay beta3 el inverter, which is $3R_oC_o$. Na5od example: calculate the normalized intrinsic delay (p) for the shown gate below:

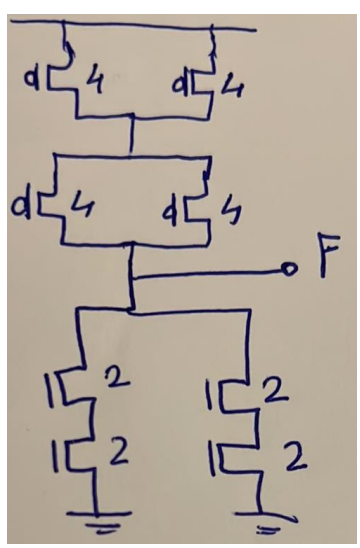

$$p = \frac{R_o * 12C_o}{3R_oC_o} = 4$$

Tare2a tanya as-hal keteer 3ashan ne7seb el p heya enena just ne7seb el output capacitance bta3 el gate beta3tak w te divide bel output capacitance beta3t el inverter, el heya $3C_o$, teb2a gebt p, bs aham 7aga fel tare2a de enak te size el gate beta3tak such that en yeb2a leha resistance foo2 w t7t 2ad el unit inverter, el heya R_o. Fa men el a5er:

Steps to calculate p of any gate:

1) Size it to have worst-case PUN & PDN resistance equal R_o.
2) Count the number of caps at the output node (i.e. drain capacitance).
3) Divide it by 3.

Example: calculate the normalized intrinsic delay *p* of a 3-input NAND gate.

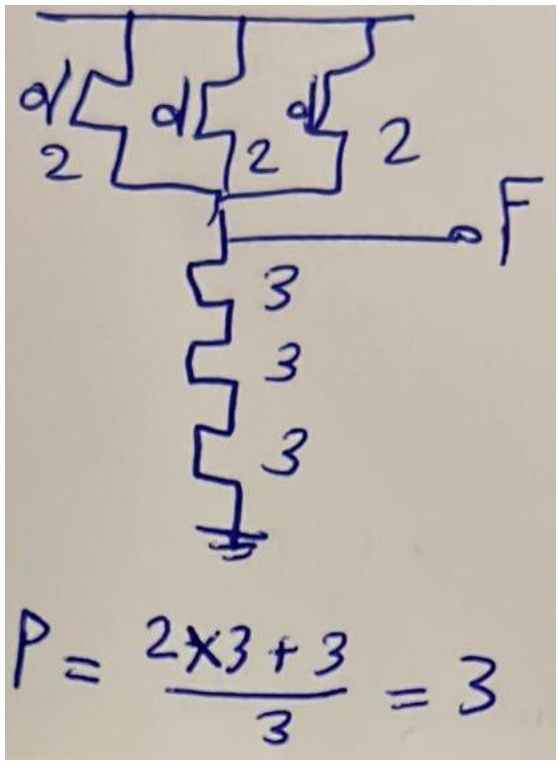

5aly balak men 7aga, e7na a3deen bene3mel kol el e7na bene3melo da 3ashan n3rf el sizing bta3 kol gate fel chain. Tyb omal ezay 3ashan n7sb el normalized delay *p* bene7tag el output capacitance el heya mo3tameda 3al sizing el ana badawar 3leeh aslan? La2 maho ana ba2olak en de taree2a t7sb beha *p,* enak ta5od el gate el enta 3ayez t3rf el optimum sizing beta3ha de e3melaha sizing b7ees yeb2a el resistance beta3et-ha foo2 w t7t R_o zy el unit inverter, then count output caps w divide them by 3 teb2a 7asabt *p.* Laken hal da keda el final sizing beta3 el gate? La2 de tare2a bs eny a7seb el *p* el ha7tag-ha 3ashan a3raf el sizing bta3 el chain kolaha.

Keda yeb2a fehemna awel term tele3lena fi equation el t_{p_j} w samenah normalized parasitic delay *p,* nesmek el term el tany b2a:

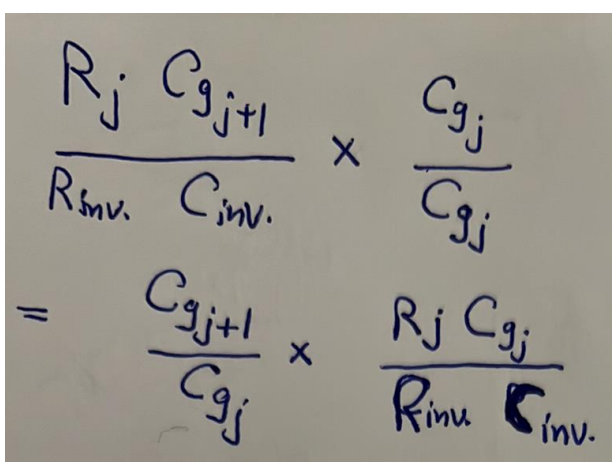

We said that we call the term $\frac{C_{g_{j+1}}}{C_{g_j}}$ fanout, we also call it *electrical effort (h),* which is el effort el betebzelo gate j 3ashan te drive gate j+1.

The term $\frac{R_j C_{g_j}}{R_{inv} C_{d_{inv}}} = \frac{R_j C_{g_j}}{R_{inv} \gamma C_{g_{inv}}}$. We call $\frac{R_j C_{g_j}}{R_{inv} C_{g_{inv}}}$ *logical effort (g),* which is the ratio between the intrinsic delay of some gate divided by the intrinsic delay of an inverter. In other words, el ratio de bet2oly el gate de lama te drive gate identical leha hayeb2a el delay beta3ha akbar 2ad eh men enaha te drive inverter. Fa el logical effort howa ka2eno indication 3an el complexity bta3t el gate, kol ma el gate teb2a el functionality beta3et-ha complicated aktar kol ma zaad el logical effort beta3ha, bayen men el esm 7ata "logical" effort, leeh 3elaka bel logic beta3 el gate.

Yeb2a 5aly balak en e7na keda 3andena el effort el betebzelo el gate divided into two parts:

1) Logical effort: el effort el hatebzelo el gate lw el ba3deha howa gate identical leha.
2) Electrical effort: in case el ba3dy makansh identical leya, fa el ratio de (electrical effort) heya el hat3awad da.

Fa lw el ba3dy kan zayee kanet el electrical effort ba2et 1 w el effort kolo b2a logical effort bs. El 2 efforts ma3 ba3d bensamehom *total effort (f).* That is, the total effort of a gate j is given by:

$$f_j = g_j * h_j$$

Tyb bene7seb el *logical effort (g)* da ezay? hane3mel zy ma bn3ml 3ashan n7sb *p* bzbt, kol el far2 enena hena hana5od el gate capacitance beta3t el gate badal el output capacitance. That is:

Steps to calculate g of any gate:

1) Size it to have worst-case PUN & PDN resistance equal R_o.
2) Count the number of caps at the input (i.e. gate capacitance).
3) Divide by 3.

Again, bene3mel sizing en el gate yeb2a leha resistance R_o just 3ashan ne7seb p w g, el final sizing lesa mane3rafosh.

Example: calculate the *logical effort (g)* of a 3-input NAND gate.

Answer:

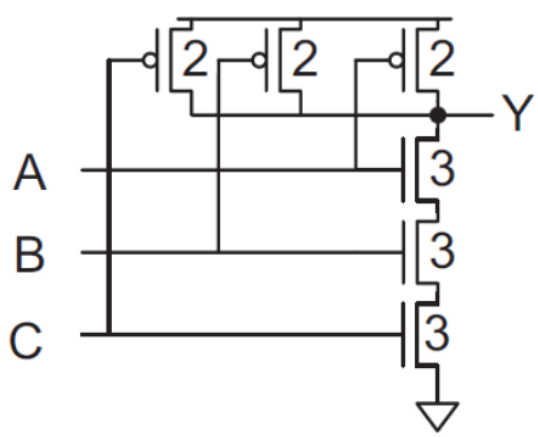

$$g = \frac{5}{3}$$

Notice that each input can have its own *logical effort*.

Example: calculate the logical effort of the shown gate:

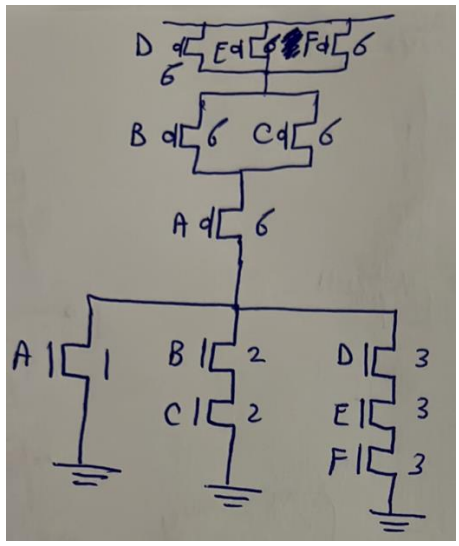

Answer:

$$g_A = \frac{7}{3}$$

$$g_B = g_C = \frac{8}{3}$$

$$g_D = g_E = g_F = \frac{9}{3} = 3$$

Yeb2a keda wasalna en el delay beta3 ay gate howa:

$$t_{p_j} = t_{p_o}(p_j + f_j) = t_{p_o}\left(p_j + \frac{g_j h_j}{\gamma}\right)$$

Meen f dool given fel chain beta3etna w meen mesh given? El given homa:

1) t_{p_o} → technology-dependent.
2) γ → constant.
3) p & g → hane7sebhom zy ma olna.

El wa7eed el mesh given howa el electrical effort aw el fanout h, la2en da beya3tamed 3al sizing beta3y w beta3 el ba3dy el ana badawar 3leehom aslan.

$$t_p = \sum_{j=0}^{N-1} t_{p_o}\left(P_j + \frac{g_j h_j}{\gamma}\right)$$

$$= t_{p_o} \sum_{j=0}^{N-1} \left(P_j + \frac{g_j}{\gamma} \cdot \frac{C_{g_{j+1}}}{C_{g_j}}\right)$$

$$= t_{p_o}\left[P_0 + \frac{g_0}{\gamma} \cdot \frac{C_{g_1}}{C_{g_0}} + P_1 + \frac{g_1}{\gamma} \cdot \frac{C_{g_2}}{C_{g_1}} + \cdots + P_{j-1} + \frac{g_{j-1}}{\gamma} \cdot \frac{C_{g_j}}{C_{g_{j-1}}} + P_j + \frac{g_j}{\gamma} \cdot \frac{C_{g_{j+1}}}{C_{g_j}} + \cdots\right]$$

$$\frac{\partial t_p}{\partial C_{g_j}} = 0 \quad \therefore \quad g_{j-1} \underbrace{\frac{C_{g_j}}{C_{g_{j-1}}}}_{h_{j-1}} = g_j \underbrace{\frac{C_{g_{j+1}}}{C_{g_j}}}_{h_j}$$

$$\therefore \quad f_{j-1} = f_j$$

Thus, this tells us that, to minimize the total chain delay, all gates must have equal total effort. This is actually the exact same result we reached when we analyzed a chain of inverters, kol el far2 en henak kanet g be 1 la2enohom kano inverters, fa kanet betsafsaf 3al fanout bs.

Total chain fanout (F):

$$F = f_0 f_1 \dots f_{N-1} = g_0 g_1 \dots g_{N-1} * h_0 h_1 \dots h_{N-1} = GH$$

$$G = g_0 g_1 \dots g_{N-1}$$

$$H = \frac{C_{g_1}}{C_{g_0}} \cdot \frac{C_{g_2}}{C_{g_1}} \dots \frac{C_{g_{N-1}}}{C_{g_{N-2}}} \cdot \frac{C_L}{C_{g_{N-1}}} = \frac{C_L}{C_{g_0}}$$

$$\therefore f_0 f_1 \dots f_{N-1} = G \frac{C_L}{C_{g0}}$$

But we said that to minimize the total chain delay, we need all total efforts to be equal. That is:

$$f_0 = f_1 = \dots = f_{N-1} = f_{optimum}$$

$$\therefore f_{opt.}^N = G \frac{C_L}{C_{g0}} \rightarrow f_{opt.} = \sqrt[N]{G \frac{C_L}{C_{g0}}}$$

So, the size of each gate is:

$$\underbrace{f_j}_{\text{total effort of gate } j} = \underbrace{g_j}_{\text{logical effort of gate } j} \times \frac{C_{g_{j+1}}}{C_{g_j}}$$

, for optimum delay: $f_j = f_{opt.}$

$$\therefore C_{g_{j+1}} = \frac{C_{g_j} f_{opt.}}{g_j}$$

$$\therefore C_{g_1} = \frac{\underbrace{C_{g_0}}_{\text{given}} \underbrace{f_{opt.}}_{\text{given}}}{\underbrace{g_0}_{\text{calculated easily}}}$$

$\Rightarrow$ Corresponds to gate 1 size

$$C_{g_2} = \frac{C_{g_0}}{g_0 g_1} f_{opt.}^2$$

$$C_{g_3} = \frac{C_{g_0}}{g_0 g_1 g_2} f_{opt.}^3$$

$$\vdots$$

$$C_{g_{N-1}} = \frac{C_{g_0}}{g_0 g_1 \dots g_{N-2}} \cdot f_{opt.}^{N-1}$$

Conclusion for slide 5 → 12:

- $t_{p_j} = t_{p_0} \left(P_j + \frac{g_j h_j}{\gamma} \right)$

  - t_{p_j}: Propagation delay of any stage j
  - t_{p_0}: intrinsic delay of an inverter $= 0.69 \times 3 R_0 C_0$
  - P_j: intrinsic delay of stage j $= \frac{C_{output}}{3}$
  - g_j: logical effort of stage j $= \frac{C_{input}}{3}$
  - h_j: Electrical effort / fanout $= \frac{C_{g_{j+1}}}{C_{g_j}}$
  - γ: constant $= \frac{C_d}{C_g}$

- $\underbrace{t_{p_0} \underbrace{\left(P_j + \frac{g_j h_j}{\gamma} \right)}_{\text{normalized delay of stage j}}}_{\text{delay of stage j}}$

- To minimize a chain's delay, all stages should have the same total effort $f_{opt.} = \sqrt[N]{GH}$
  - N : number of stages in the chain.
  - $G = g_0 g_1 \cdots g_{N-1}$, $H = \frac{C_L}{C_{g_0}}$
  - C_L : chain load capacitance
  - C_{g_0} : 1st stage gate capacitance

- To size a certain stage:

$$f_j = g_j \frac{C_{g_{j+1}}}{C_g} = f_{opt.}$$

Example:

For the shown chain below, the first NAND gate has an input capacitance of Cin. The chain is loaded by a load of 1000Cin. Assuming $\gamma = 1$, find:

1. The value of optimal stage total effort.
2. The value of optimal fanout for each of the stages.
3. The optimal chain delay in terms of Ro and Co.

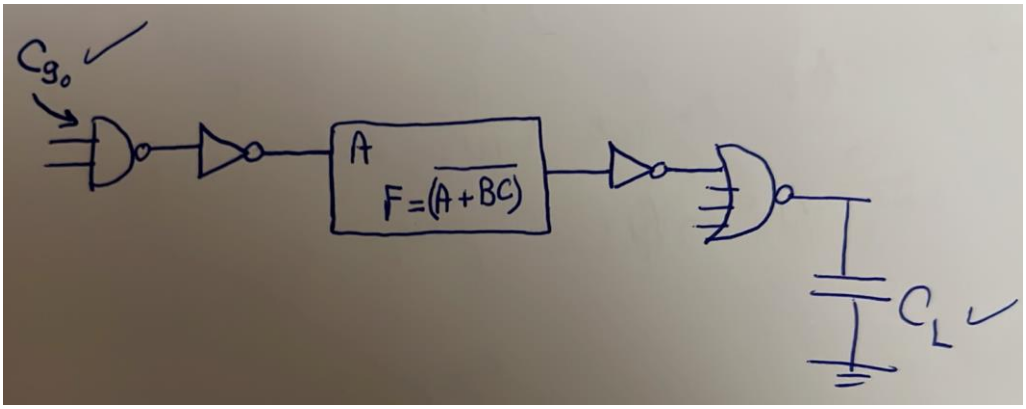

Answer:

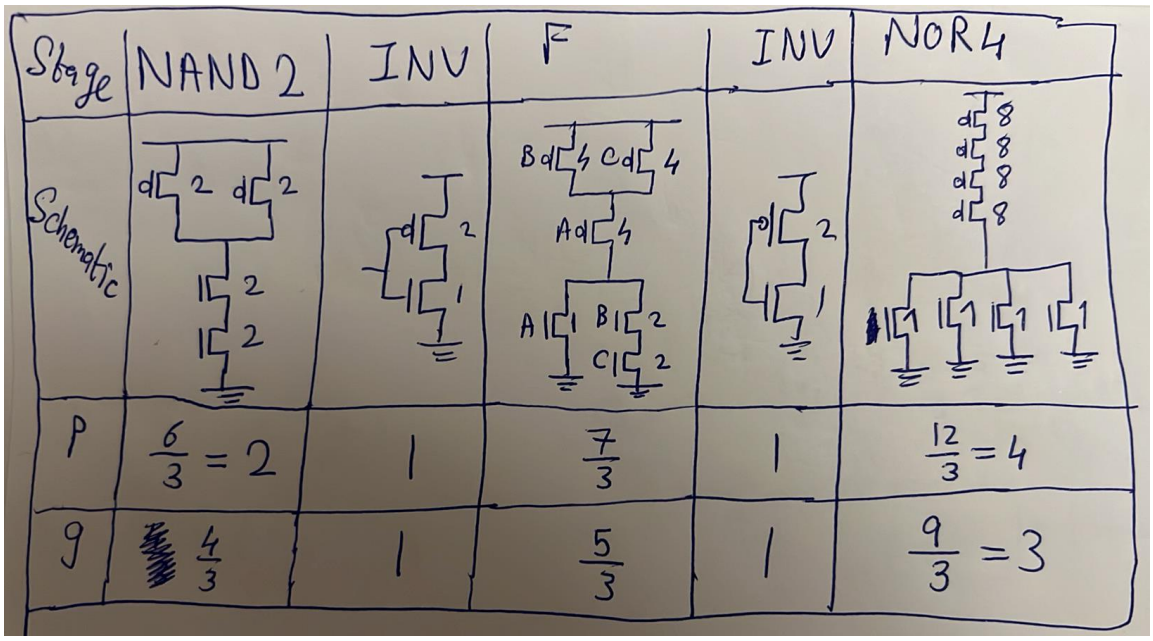

Stage	NAND 2	INV	F	INV	NOR4
Schematic					
P	$\frac{6}{3}=2$	1	$\frac{7}{3}$	1	$\frac{12}{3}=4$
g	$\frac{4}{3}$	1	$\frac{5}{3}$	1	$\frac{9}{3}=3$

$$G=\prod_{j=0}^{N-1} g_j=\frac{4}{3}\times 1\times\frac{5}{3}\times 1\times 3=\frac{20}{3}$$

$$H=\frac{C_L}{C_{g_0}}=\frac{1000C_{in}}{C_{in}}=1000$$

$$\boldsymbol{f_{opt.}=\sqrt[N]{GH}=\sqrt[5]{\frac{20}{3}\times 1000}=5.818}$$

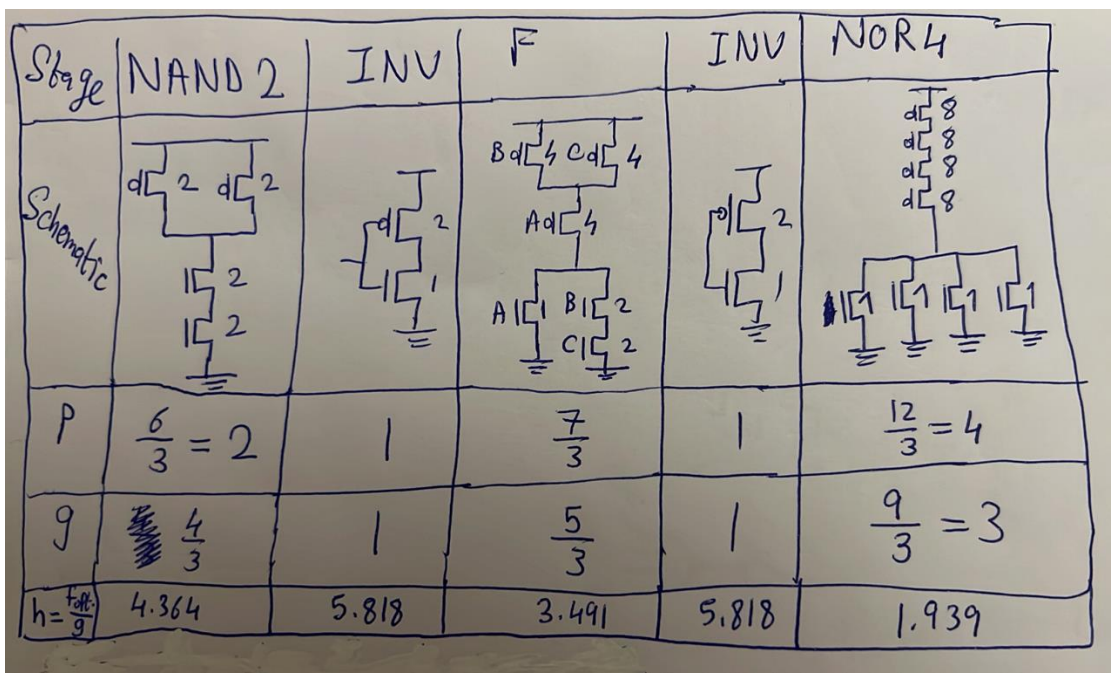

Stage	NAND 2	INV	F	INV	NOR4
Schematic					
P	$\frac{6}{3}=2$	1	$\frac{7}{3}$	1	$\frac{12}{3}=4$
g	$\frac{4}{3}$	1	$\frac{5}{3}$	1	$\frac{9}{3}=3$
$h=\frac{f_{opt.}}{g}$	4.364	5.818	3.491	5.818	1.939

$$t_p=\sum_{j=0}^{N-1} t_{p_j}=\sum_{j=0}^{N-1} t_{p_o}\left(p_j+\frac{g_j h_j}{\gamma}\right)$$

$$=t_{p_o}\sum_{j=0}^{N-1}(p_j+g_j h_j)=0.69$$

$$*\,3R_oC_o\left(2+1+\frac{7}{3}+1+4+\frac{4}{3}\times 4.364+1\times 5.818+\frac{5}{3}\times 3.491+1\times 5.818\right.$$

$$\left.+\,3\times 1.939\right)=3R_oC_o*39.423=\ \mathbf{81.61}\ \ \boldsymbol{R_oC_o}$$

Example: Find an expression for the normalized intrinsic delay (p) and logical effort (g) of an N-input NAND gate. Repeat for an N-input NOR gate.

Answer:

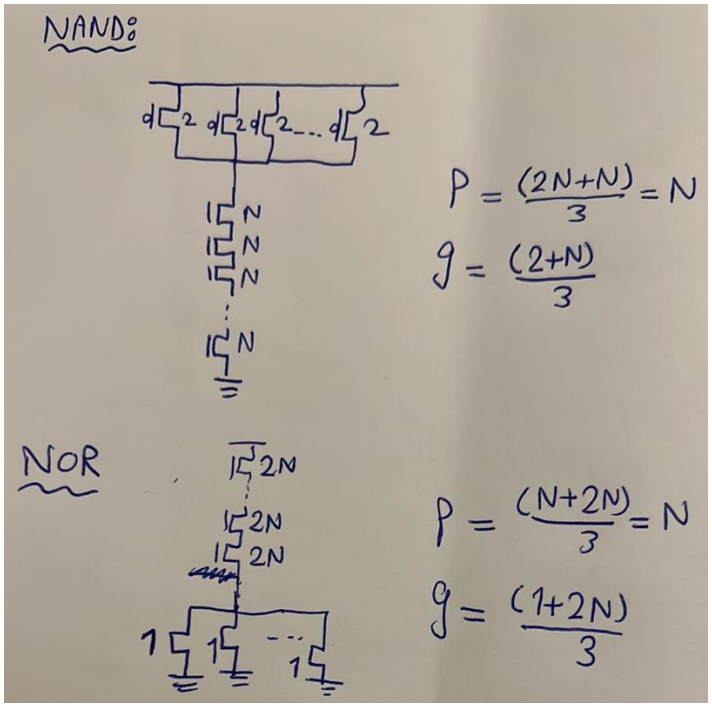

So, it is clear that NAND gate is better than NOR gate in terms of delay since it has less logical effort. Tab leeh 7asal keda? La2en fel 2 cases sawa2 el NAND aw el NOR hayeb2a fih series chain, el series chain de fel PUN fel NOR w fel PDN fel NAND, we7na 3arfeen en el series chain betkabar el sizings. Fa t7b t7ot el series chain de fel PUN wala fel PDN? Akeed fel PDN, la2en el PUN fiha PMOS el homa kobaar 5el2a fa mesh na2sa, w bel taly el NAND hateb2a a7san.